pittman traffic & safety equipment
sales@pittmantraffic.com
(01) 531 2111

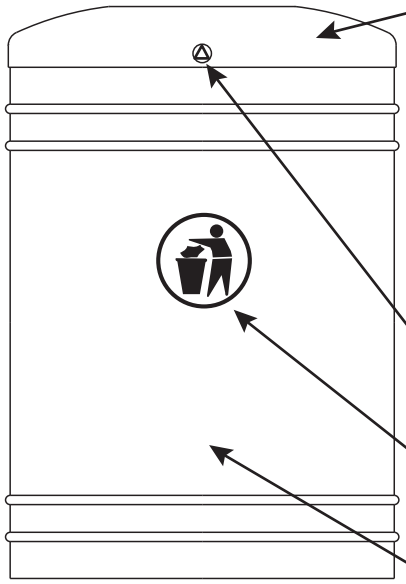

A

x1
Couvercle poubelle 60L
ATE 208100.A

x 1
Charnière 60x60x20
ATE 03284

x4
Rivets 4x12
ACC 18202

x1
Serrure triangle
ACC 19072

x1
Adhesif blanc
ACC 01019

x1
Corps poubelle 60 L
ATE 208100.B

B

x4
Vis H M8x20
ACC 22273

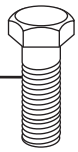

x 4
Rondelle M8
ACC 18145

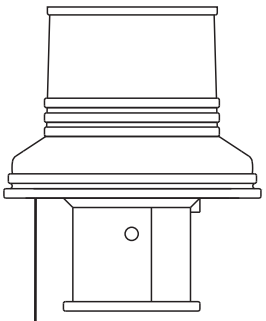

C

x1
Socle
MFB 19078

D

x1
Clef triangle
ACC 03341

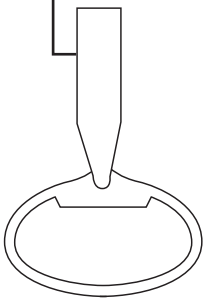

x1
Seau 60 L
90001003.003
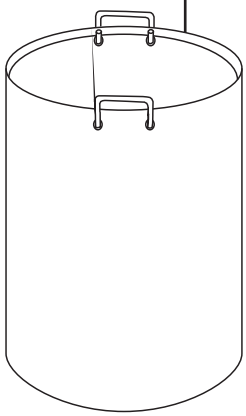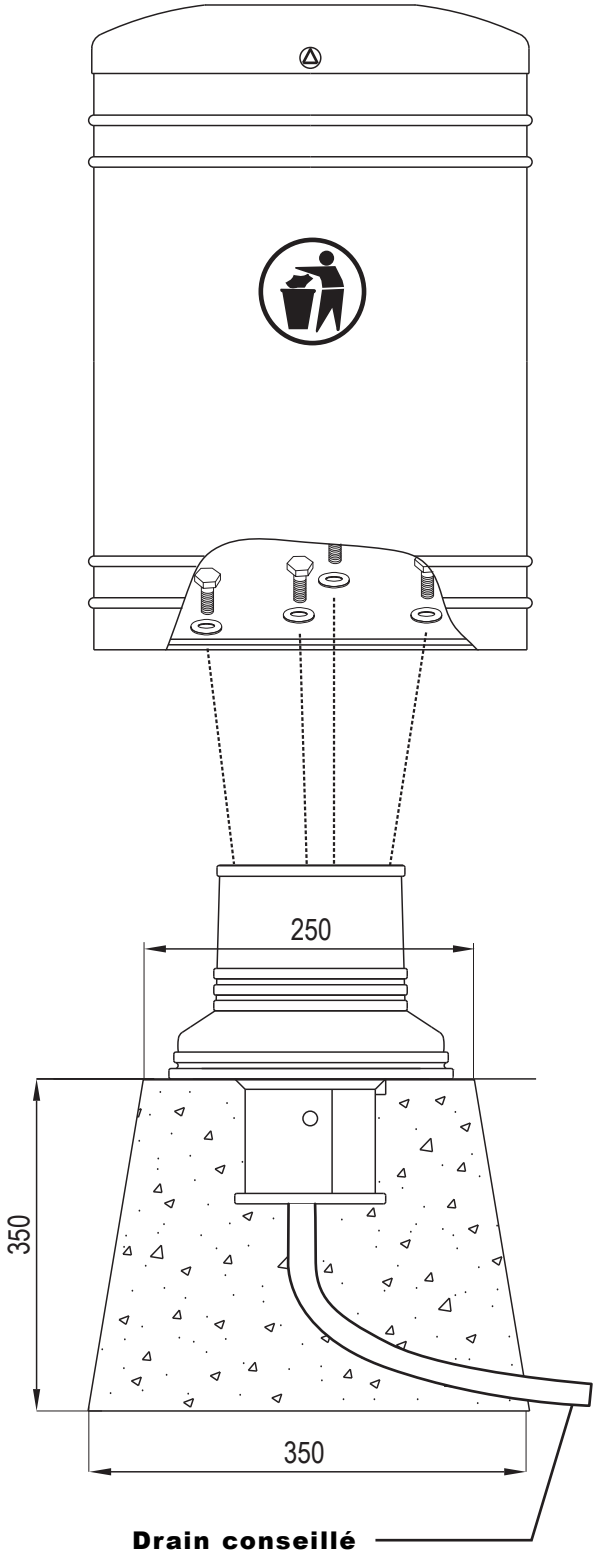
F