Ⓐ Lower Support Rail

Fit 1no M8 x 65mm fixing bolts

Ⓑ Upper Support Rail

Fit 1no M8 x 65mm fixing bolts

Ⓒ Lower Trough Top

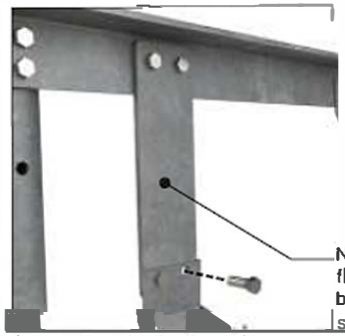

Note that plate is fixed in front of trough bracket and upper support rail

Fit 4no M8 x 20mm fixing bolt

Ⓓ Lower Trough Bottom

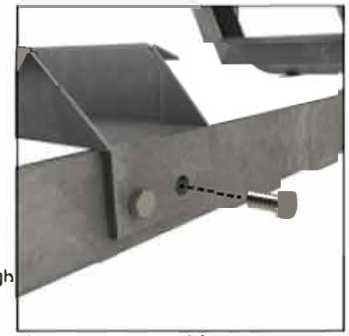

Fit 2no M8 x 20mm fixing bolt

Ⓔ Upper Trough Top

Note that trough bracket is fixed in front of upper support rail

Fit 2no M8 x 20mm fixing bolt

Ⓕ Upper Trough Bottom

Fit 4no M8 x20mm fixing bolt

Ⓖ Lower Support Rail Join

Fit 1no M8 x 65mm & 1no M8 x 20mm fixing bolt

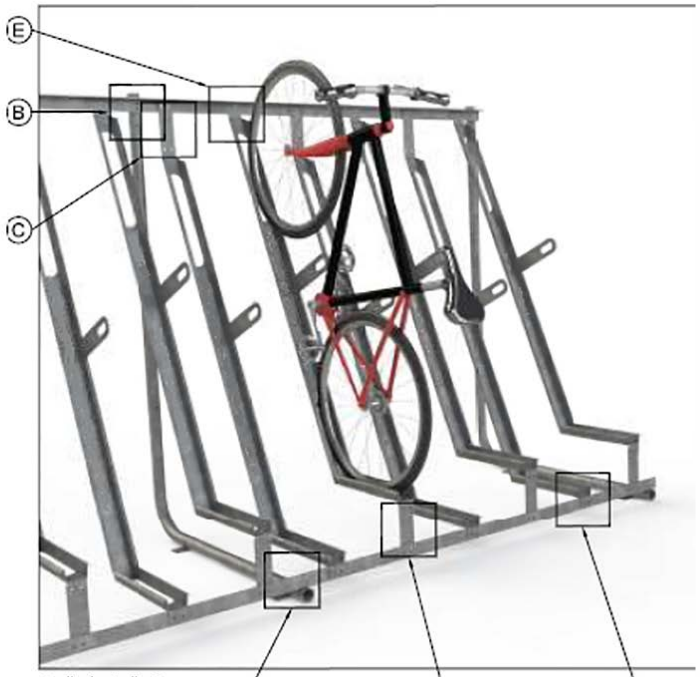

Fully Installed

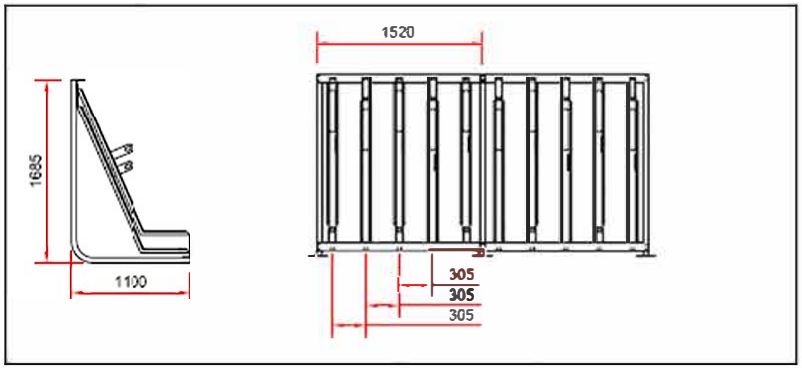

Use 2 Fixing plates per join
(both upper and lower support rails)

- L-Shaped leg support must be included at least every 6 bike positions

pittman traffic & safety equipment
sales@pittmantraffic.com
(01) 531 2111